CVDIM Series

IP20 RATED

1~10V Series Controllers

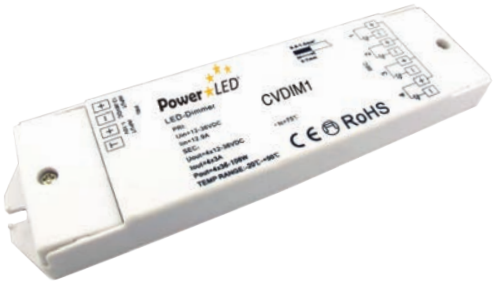

Key Features:

- Suitable for indoor LED lighting
- Capable of RGB colour adjustment
- 1-10V or resistive dimming
- PUSH and Constant voltage dimmers available
- 0-100% dimming range via logarithmic characteristic, perfect for human vision
- 256 levels of grey scales with smooth dimming control
- Power repeater available for increased lengths of LED tape
- Analog dim driver, receive standard 1-10V dim signal input of Grey scales, smoothly without any flash

CVDIM SPECIFICATION

Part Code	CVDIM1	CVDIM4
Voltage	12 ~ 36VDC	12 ~ 36VDC
Signal Channel	1CH1-10V	4CH1-10V
Rated Power	4 x (60-180)W	4 x (60-180)W
Rated Current	4 x 5A	4 x 5A
Signal Channel	1CH PWM	4CH PWM
Load Regulation	±0.4%	±0.4%
Temperature Range	-20°C ~ +50°C	-20°C ~ +50°C
TA	-20°C ~ +50°C	-20°C ~ +50°C
TC	+75°C	+75°C
Dimensions	178 x 45 x 19mm	178 x 45 x 19mm

Mechanical Specification

CVDIM1 & CVDIM4

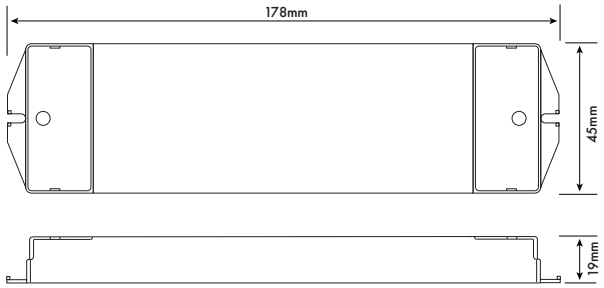

PowerLed (UK) Ltd
Orion House
Calleva Park
Aldermaston
Berkshire
RG7 8SN

Contact:
Tel: 0118 9703856
enquiries@powerled.uk.com
www.powerled.uk.com

PowerLed®

IP20
RATED

CVDIM Series

1~10V Series Controllers

Wiring Mechanical Diagram

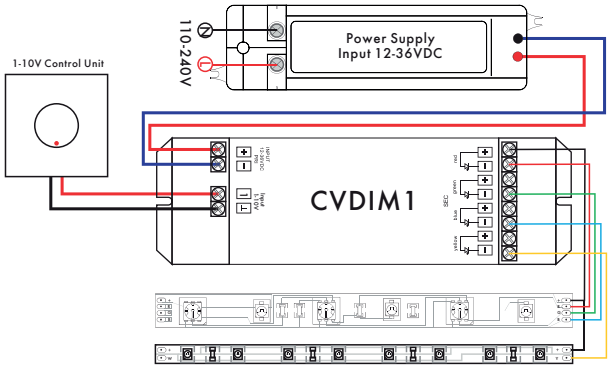

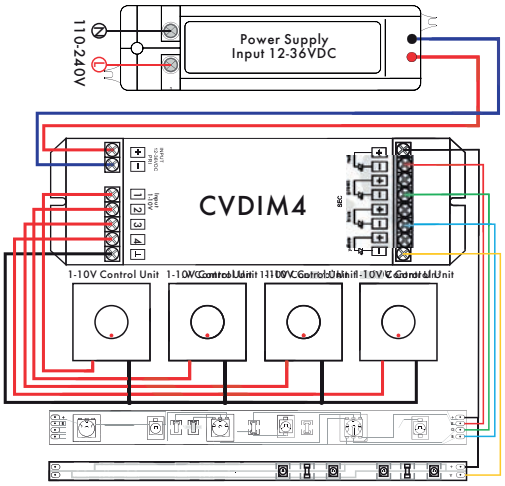

PowerLed (UK) Ltd
Orion House
Calleva Park
Aldermaston
Berkshire
RG7 8SN

Contact:
Tel: 0118 9703856
enquiries@powerled.uk.com
www.powerled.uk.com

PowerLed®